H1	H2	H3	H4
Sam Whaley	Nick Zeltner	Ross Banham	Zac Blomeley
Hattie Rogers	Tom Pollard	Max Goodbody	Eliott Savelon
Duncan Gregor	William Heathcote	Ben Harris	Martin Evans
Ewan Wilson	Will Crocker	Tom Williamson	Henry Start
Arthur Fry	wilf taylor	Jack Woolterton	Jasmine Boote
Rachael Jenkins	chris holman	Andrew Voysey	Christian Smart
Lewis Clark	Peter Deming	Alice Senior	Iain Ferguson
Eve Kennedy	Isabelle Fellows	Sven Gauter	Geoff Carveth
Andrew Conan	Andrew Bridgman	James Deaton	William Symonds
Rory Dixon	Rob Thomas	Daniel Goodman	Nick Ireland
Amelie Hiscocks	Thomas Parkhurst	douglas struth	Jeni Richards
Charlie Gran	Olly McGill	Chris Keatley	Lewis Agate
Stuart Swan	Ian Fitzgerald	Sean Purdy	Bruce Allan
Andy mcivor	jemima owens	Ross Banham	

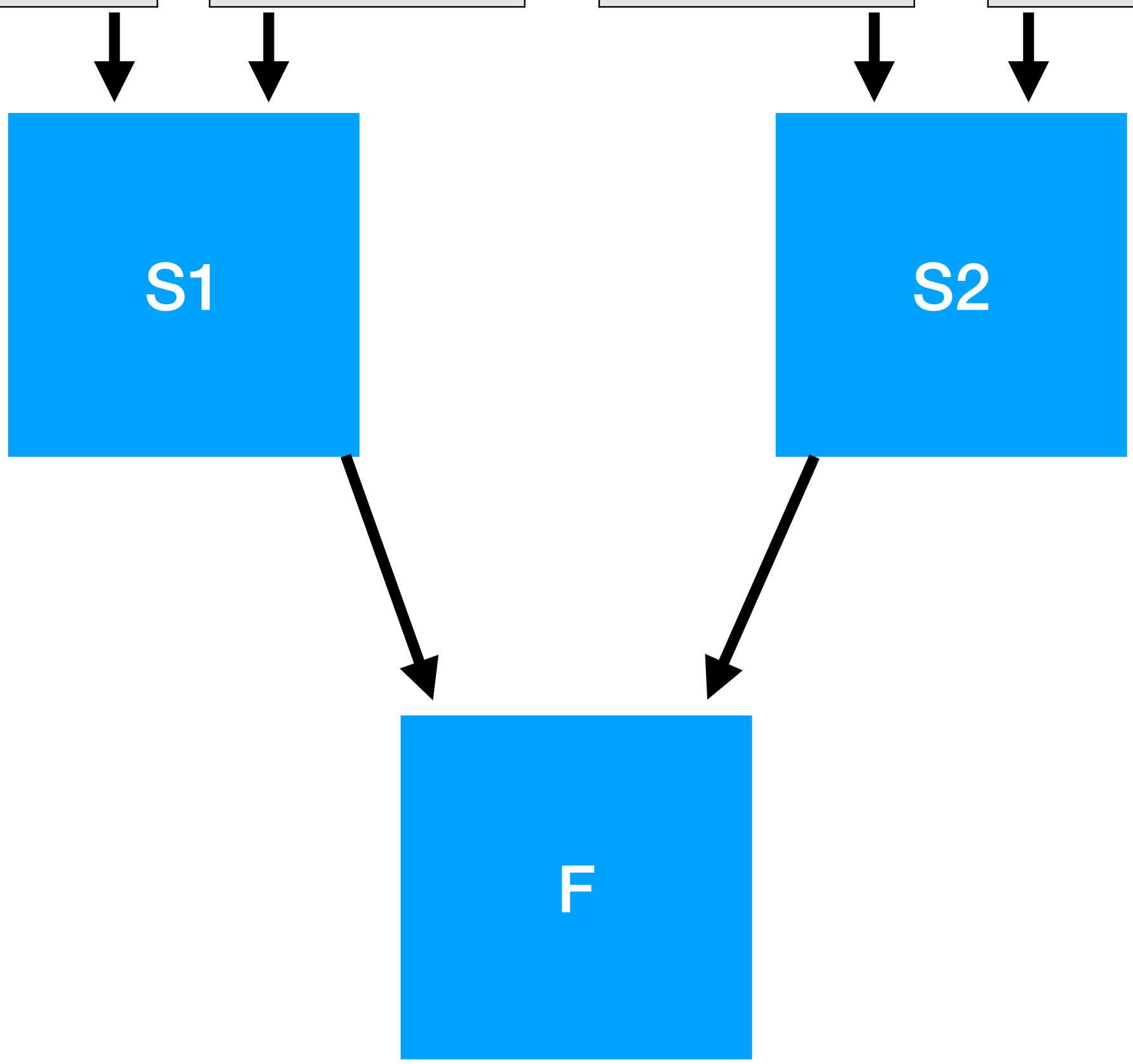

Top 6 progress from each round